Volume 18, Issue 2

February 2021

Technicians Service Training

INSIDE THIS ISSUE:

Upcoming Webinar / Seminars:

TST Big Event
Saturday & Sunday

March 27 & 28 P 27

April 21st 2021
Tom Rayk

SAVE MONEY by signing up for Membership…Simulcast $20.00 member price

Checkout TST TechFlix over 88 videos with more being added. TST Members $9.99 a month

Check out our YouTube channel tstseminars

Like us Facebook

Editor
"G" Jerry Truglia

"Remember Where You Started"

Between attending many different virtual events online and teaching many online webcast of my own, it's been a whirlwind of time in front of a computer screen or camera. One of my most enjoyable task is getting ready for the 2021 TST Big Event. This year is unlike any other Big Event since it will not be in person. We were all taken back when the 2020 TST Big Event had to be postponed due to the pandemic. Catching the TST board and myself by surprise we had to reschedule the event for August 2020, than once again postpone it. All of the delays were not something we wanted, but in the sake of everyone's safety and government mandates, we had no choice other than to make the **TST 2021 Big Event** an online event. **We added at no cost one more full day of training to make it a Saturday and Sunday training event that can be viewed for 90 days after the event. The Big Event will have a trade show with specials and many prizes that attendees can win.** Our special Sunday on vehicle class will allow attendees to ask and see test procedures live on vehicle for a better understanding how to perform the test and use the equipment. The tablets with all the handouts, a few sponsors videos, TST newsletter and more will be mailed to everyone in the USA that has paid. All others will receive a gift card and a download link. **Hope to see you on March 27th & 28th** at the TST Big Event.

(Con't on page 2)

"Remember Where You Started" (con't from p. 1)

Let's get started with a few general tips before diving into a case study involving a 2007 Ford F150 Variable Cam Timing (VCT) problem I hope you'll find informative.

Adding Air Creates a Rich Mix?
The purpose of the Air Injection Reaction (AIR) system is to reduce hydrocarbon (HC) and carbon monoxide (CO) emissions left after the combustion process. AIR system failures often involve pumps damaged by moisture, vacuum hoses damaged by heat or check valves sticking open or closed from carbon buildup. Faulty AIR systems tend to make engines run rich. This will occur if the air from the pump enters the exhaust manifold before the upstream O2 sensor or does not switch to underhood when the engine is warm (pre 1996 vehicles).

Atmospheric air is injected under pressure into the exhaust manifold upstream by the air pump. Air pumped directly into the exhaust helps to further oxidize exhaust gases before they enter the catalyst.

Some older vehicles switch air injection between the exhaust manifolds and the catalyst itself. Air is sent upstream right after the engine is started cold, but switches downstream when the catalyst warms up and starts to work. It is important to remember to disable air injection when you evaluate exhaust gas O2 levels, since air injection can elevate O2 levels and lead to false conclusions. All newer vehicles no longer supply air down to the converter since the catalytic converters after 1996 are oxidizing converters. Remember that many engines do not use a belt but rather an electric pump.

Disabling air injection does not mean clamping off any air injection hoses and tubes. This might lead to permanent damage of hoses and valves. Instead, before taking tailpipe exhaust samples, follow the recommended OEM service procedure to disable the air pump electrically or to divert air injection to the vent port.

(Con't on page 6)


OTC
FIX MORE CARS FASTER
OTC DIAGNOSTICS DRIVEN BY BOSCH
OTC
EVOLVE
encore
OTC
PROFESSIONAL REPAIR AND COLLISION DIAGNOSTICS
• Quickly scans all modules and performs special tests and resets to diagnose and repair faster
• Includes one year of software updates for access to new tests, vehicle-ECU combinations and data items
• Wi-Fi enabled to wirelessly print, send and save reports for customers or insurers
• Evolve includes wiring diagrams for vehicles 1986 and newer and wireless, J2534-compliant VCI
• Newest 3.0 software includes more than 30 million likely repairs and troubleshooting tips
• Optional 3914 wireless battery and charger/starter system tester works with software version 2.10 and newer
YouTube
otctools.com
QUESTIONS?
888 662 5801

What is TST?

TST is a group of dedicated technicians and instructors committed to the continuing education of our fellow technicians. We provide training seminars to technicians at a reasonable price. TST brings our members nationally known instructors and state of the art training.

Our Goal & Mission Statement

- ***Keep our fellow technicians up to date with the latest technology.***
- ***Provide training seminars for a reasonable price.***
- ***Deliver information that the technician can use now.***
- ***Keep technicians informed of information affecting our industry.***
- ***Increase consumer awareness of what a good technician is.***

Why join TST?

TST membership includes special pricing on weekday night seminars and the occasional full Saturday seminar. With a **$75.00 yearly individual or shop $250.00 membership, the simulcast are only $20.00. TST seminars are NOT sales or product seminars.** The instructors that TST brings in are all "hands-on" industry experts with up to date, cutting edge knowledge that you can use in your shop the next day. That's 75 dollars for a seminar in which you are able to learn something useful, for fixing those tough jobs that we all see on a regular basis. Our instructors are masters at making the complex understandable. Membership also includes a newsletter full of real world technical articles, diagnostic case studies, and solutions to the kinds of problems you see in your bays each week.

The following are some of TST's regular instructors:

Bernie Thompson of ATS
John Thornton of Autotrain Inc.
Wayne Colonna of ATSG
Jorge Menchu the "Labscope Guru," AES Wave
John Anello of Auto Tech On Wheels
Mark Warren of World Pac / Motor Magazine
Brandon Steckler of CTI & Motor Age Magazine
Peter Meier of Motor Age Magazine
Ken Zanders of Illinois Air Team
"G" Jerry Truglia of A.T.T.S. Inc.

Technicians Service Training
11 Lupi Plaza
Mahopac, NY 10541
Phone: (845) 628-6928
Fax: (845) 628-9109
Email:

Info@tstseminars.org

TST on YoutTube...type in tstseminars

Currently there are TST chapters in Connecticut, Massachusetts, New Jersey, New York and membership continues to grow. For more information you can call TST headquarters at:

(845) 628-6928
www.TSTseminars.org

"Remember Where You Started" (con't from p. 2)

Keeping Your Balance

When you need to confirm and zone in on a fuel injector problem, the best test to perform without a bunch of expensive tools is a fuel injector balance test. Follow these steps to perform this simple test on most engines without breaking your tool budget.

With the ignition off, remove the injector plug/wire connectors of the injector to be tested. Next, install an accurate fuel pressure gauge and fuel injector tester. The fuel injector tester is a special tool that allows you to operate the injector independently of the Engine Control Module (ECM). If you have a scan tool capable of performing this task, this step is not necessary.

Turn the ignition on/off as needed to get the maximum reading on your fuel pressure gauge. Write that number down. If you are using a manual tester, select the "1 Pulse/500ms" option and press the "Activate Injector" button once. Record the reading on the fuel pressure gauge. The difference between what you started with and what you ended up with is the amount of pressure drop. Do this twice for each injector. Be sure to start the engine between tests on each cylinder to prevent hydrostatic lock, and to start each new test with the same peak pressure reading.

Once you have completed your testing on all injectors and have figured out the pressure drop for each one, it is time to compare. Determine the average pressure drop by adding them all up and then dividing by the number of cylinders tested. Suspect a problem with any injector whose drop exceeds the average by ±1.5 psi. An injector with a lower drop probably is restricted and passing less fuel, while one with a larger drop probably

(Con't on page 7)

"Remember Where You Started" (con't from p. 6)

is leak too much fuel.

Confirm your diagnosis and repair by using fuel trim. Fuel trim is information that is sent to the ECM and stored in memory as Short Term Fuel Trim (STFT) and Long Term Fuel Trim (LTFT) values.

If money is not an issue or you own a pressure transducer you can connect the pressure transducer to the fuel rail connection. Once your all connected it is a matter of setting up your scope to capture the waveforms (left). The test procedure is the exact same as when you connect your fuel pressure gauge. The examples show The red channel B is coupled to AC voltage while the blue channel A is DC coupled. The red channel is reading the pressure pulses from the fuel rail and the blue channel is the trigger for number one so the firing order can be read. The test process is not all that hard to perform. ***Try it, you'll like it.***

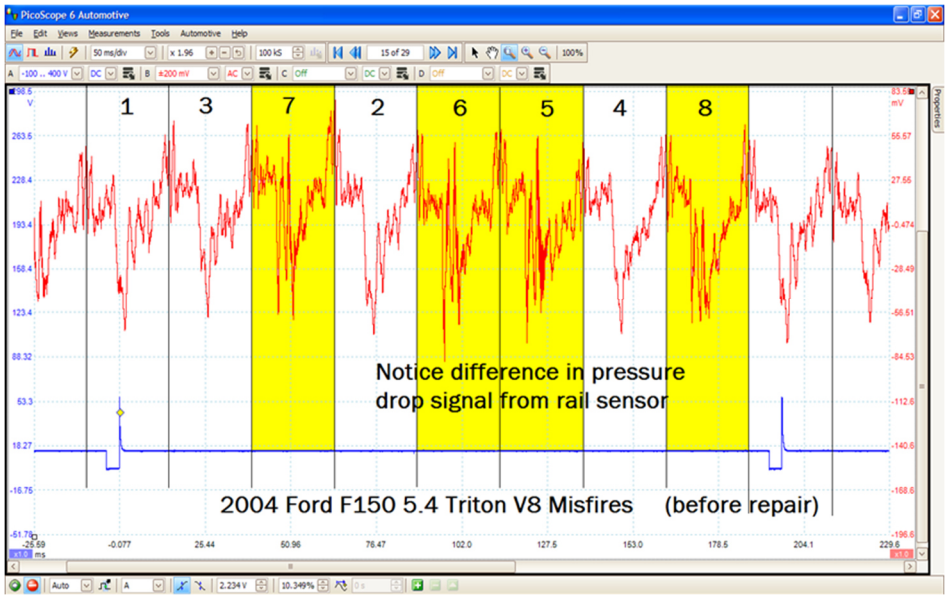

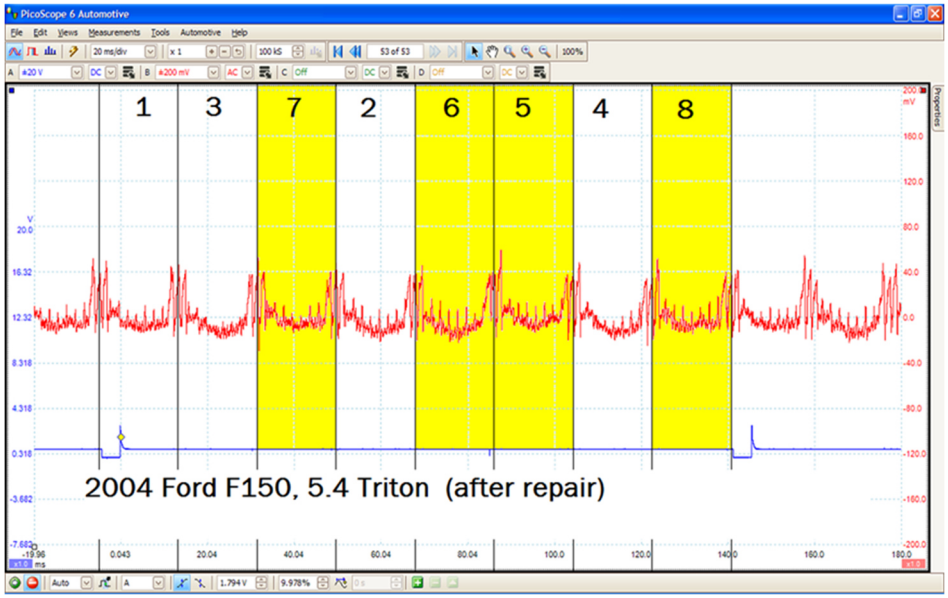

(Con't on page 10)

GTC505
Engine Ignition Analyzer

Complete ignition system diagnostic:

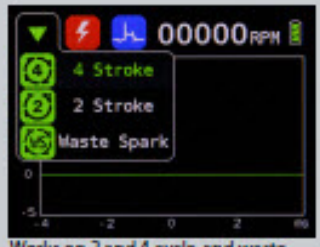

Works on 2 and 4 cycle, and waste spark ignition systems engines.

Displays secondary ignition waveforms.

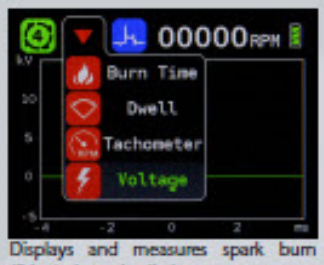

Displays and measures spark burn (firing) time, dwell time, current ramp time, RPM, and spark plug peak voltage.

Candle stick graph compares maximum, minimum and average measurements of several cylinders.

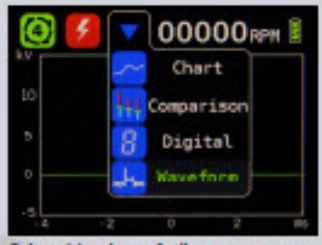

Selectable view of all measurements modes as chart, compare graph, analog gauge / digital readout and waveforms.

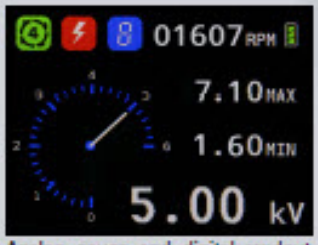

Analog gauge and digital readout with maximum and minimum.

Quick, powerful and easy to use

- Plug the appropiate sensor pick-up into the flexible probe
- Select the engine's cycle (4-stoke, 2-stroke, or waste spark)
- Select the measurement type and display format
- Place the pick-up on top of the ignition module, or over the spark plug wire
- The GTC505 will automatically detect and adjust all parameters to provide accurate measurements and clear graphs

Useful for troubleshooting:

- Non-starts
- Misfires
- Intermittent problems
- Primary and secondary coil circuits faults
- Fouled or damaged spark plugs
- Damaged spark plug wires

Specially designed pick-ups for coil on plug ignition modules (left) and spark plug wires (right).

Chart mode used for detecting intermittent or infrequent failures and misfires.

General Technologies Corp. #121-7350 72nd Street Delta, BC V4G 1H9 - Canada
Toll Free: 800-440-5582 / Tel: 604-952-6699 / Fax: 604-952-6690 **www.gtc.ca / info@gtc.ca**

GTC
WWW.GTC.CA

FEATURED PRODUCTS

A Family of Targeted G.D.I. Fuel System Products

Offer solutions for your customer's G.D.I. deposit problems!

The Run-Rite® G.D.I. Fuel System Cleaning Kits contain products that were specifically formulated to address the unique needs of G.D.I. engines, while still providing the same high level cleaning required on P.F.I. engines. Safe for use on: Gasoline Direct Injection, Port Fuel Injection and Turbos & Inter-coolers. Recommended every 15,000 miles or annually. The G.D.I. Preventive Maintenance Kit is recommended in between annual services, every 7,500 miles, to maintain optimum G.D.I. engine performance.

Run-Rite® 2-Step G.D.I. Fuel System Cleaning Kit

Part #7017 *12 kits/case*

Contains one bottle G.D.I. Fuel System Cleaner and one can Direct Injection Deposit Cleaner.

Run-Rite® 3-Step G.D.I. Fuel System Cleaning Kit

Part #1077 *8 kits/case*

Contains one bottle G.D.I. Fuel System Cleaner, one can Direct Injection Deposit Cleaner and one bottle G.D.I. Oil System Treatment.

Run-Rite® G.D.I. Preventive Maintenance Kit

Part #1501 *12 kits/case*

Contains one bottle of Sledgehammer and a Fuel Shot.

BATTERY

Run-Rite® Battery Maintenance Kit

Part #6210 *12 kits/case*

- 2-step kit containing Battery Wash and Battery Corrosion Protectant

RE-INTRODUCING

iQ3 Performance Oil

Part #7300 *12 bottles/case*

- Engineered for higher performance, reduced emissions & increased fuel economy.
- 1 quart

1-800-872-8921 **www.Run-Rite.com**

"Remember Where You Started" (con't from p. 7)

2007 Ford F150 5.4L VCT Problem

This Ford came in with the MIL illuminated and a poor performance problem. A common problem on these engines is due to a problem with the VCT system. So the first thing we checked was the oil, noticing it was new and filled. Our next step was connecting our EScan, checking for DTCs Diagnostic Trouble Codes). We found the following DTCs stored in the computer: P0300 (random misfire detected), P0301 (cylinder No. 1 misfire detected) and P0306 (cylinder No. 6 misfire detected). These misfires DTCs can be caused by ignition, fuel or mechanical problems. We ruled out both ignition and fuel, leaving us with most likely a mechanical problem. To confirm the mechanical problem, we performed a relative compression test using the scan tool. The results of the test confirmed that we had a mechanical problem that was causing the misfires.

Because this was the first time that we had seen this vehicle and customer, we had to ask what maintenance had been performed. The owner informed us that he was having the vehicle serviced at a local tire shop that offered a $19.95 oil and filter change. The oil that the tire shop used was 10W30 along with a cheap import oil filter.

Because the proper oil and filter are critical to proper operation of the VCT system, we suspected that the system was damaged along with other problems. Ford requires 5W20 synthetic blend oil along with a Motorcraft (or service equivalent) oil filter every 5,000 miles or 3,000 miles if the vehicle is used in severe conditions, load and driving. The owner of this vehicle was in the construction business using the vehicle to haul a bunch of heavy supplies and a trailer. Remember that when using other than the recommended oil and filter, engine damage can occur prematurely. The correct oil is critical in this and every other variable timing system.

When we took the valve cover off we noticed that the

(Con't on page 11)

"Remember Where You Started" *(con't from p. 10)*

phaser and solenoid was gummed up with burned oil.

It's always a good idea to know how a system works before tearing anything apart. A quick overview of the system is that the VCT is connected to the camshaft, controlled by the PCM via the oil control solenoid. The solenoid, by allowing or restricting oil flow (applying or releasing the cam phaser) controls the VCT system.

The VCT phaser has four modes: idle, part throttle, wide open throttle and default mode. Adjustments are based on airflow, engine and coolant temperature, part and wide-open throttle, RPM, load and throttle position. The purpose of the VCT system is to help reduce emissions, increase engine output, improve idle quality and of course increase fuel mileage.

Because of the improper maintenance, the fix for this 5.4L was pretty involved. With the customer's approval, we replaced the phasers, timing chains, adjusters and solenoids. We also cleaned the oil passages and removed the oil pan to access and clean the oil screen and pump. At least now this engine once again was able to pull the load and run smoothly.

eSCOPE ELITE4™

Electronic Lab Scope 4 Channel

eSCOPE ELITE4
with Surface Pro 4 Tablet
(ESL3000)

eSCOPE ELITE4 (ESL3100)

eSCOPE ELITE4
Handle Articulation

eSCOPE ELITE4 - 4 Channel scope

- **Capture All Data:** ATS' unique circular buffer system does not drop data.
- **Ultra Sharp Waveforms:** No need for filters that can mask data. ATS designs our scopes so the signal is accurate and clean.
- **Dual Time Base:** This allows two different frequencies to be displayed on one screen with two different scope displays, simultaneously.
- **Pull Down Circuit:** A Controlled pulse that sinks power from vehicle circuit to ground. Control circuits like ignition coils, fuel injectors and solenoids.
- **TTL Output:** Sends a 0-5v square wave signal out of scope. Turn on devices such as ignition coil drivers, test vehicle's circuits, and test vehicle's circuits for loading.
- **Automatic Test Lead Connection Detection:** This unique feature allows you to know the scope lead has a good connection. "Red"= Bad connection. "Green"= Good connection. It's that easy!
- **Patented Overlay Technology:** ATS' unique programming overlays an engine cycle grid over your waveforms.
- **Automatic voltage attenuator:** Just change the voltage setting and the scope does the rest.
- **Deep Record Function:** No time, voltage, or trigger setup needed.
- **Pressure Transducers:** Drives four pressure transducers at once.

ATS AUTOMOTIVE Test Solutions **www.atsnm.com** **1.800.572.6112**

"Reading An Electrical Map Means Little If You Don't' Know How To Drive"

Wiring diagrams are like road maps. You wouldn't take a cross-country trip without consulting a map or a GPS, would you? But many techs will dive blindly into an electrical diagnosis without first consulting the schematic. Unfortunately, wiring schematics don't come with a GPS navigation option. (The one neat exception I've seen is the OEM Mazda diagrams in MotoLogic. They are interactive and show current flow in the circuit under different key positions.)

For the most part we have to do it the way techs have been doing it for years. And you'll find it isn't all that difficult if you read through and follow all the steps. Just like reading a road map, the first place to start is with the diagram information, providing you with the position, arrangement of devices and terminals. OE diagrams often are all-inclusive, that is they show everything on one big diagram that is broken up into segments. Most aftermarket service information providers provide simpler diagrams, referred to as block diagrams, that show only the components/wiring needed by an individual circuit. Most block diagrams also start with the power source at the top of the page and follow the path to ground, ending at the bottom of the page. This is followed by a color code chart, so you'll know what colors the diagram abbreviations are referring to.

Think that is too simple? Check out an OEM German schematic where all the colors are listed in Deustch! Next is the abbreviations list that will clue you in on what the component abbreviations stand for. Last, but not least, review the symbols that will be used in the diagrams so you understand what they mean.

Once you're comfortable with the basic layout of the schematic (map) you're using, it's time to locate the specific address you want to investigate. On a wiring diagram, that would be the electrical component, or load, that is giving you a problem. If that load isn't working, it's because it has an internal problem or the current flow isn't flowing the way it should. That means we need to identify the basic elements the load needs to operate: the source of power, the control(s) that determine when the load is on and the path that connects it

(Con't on page 17)

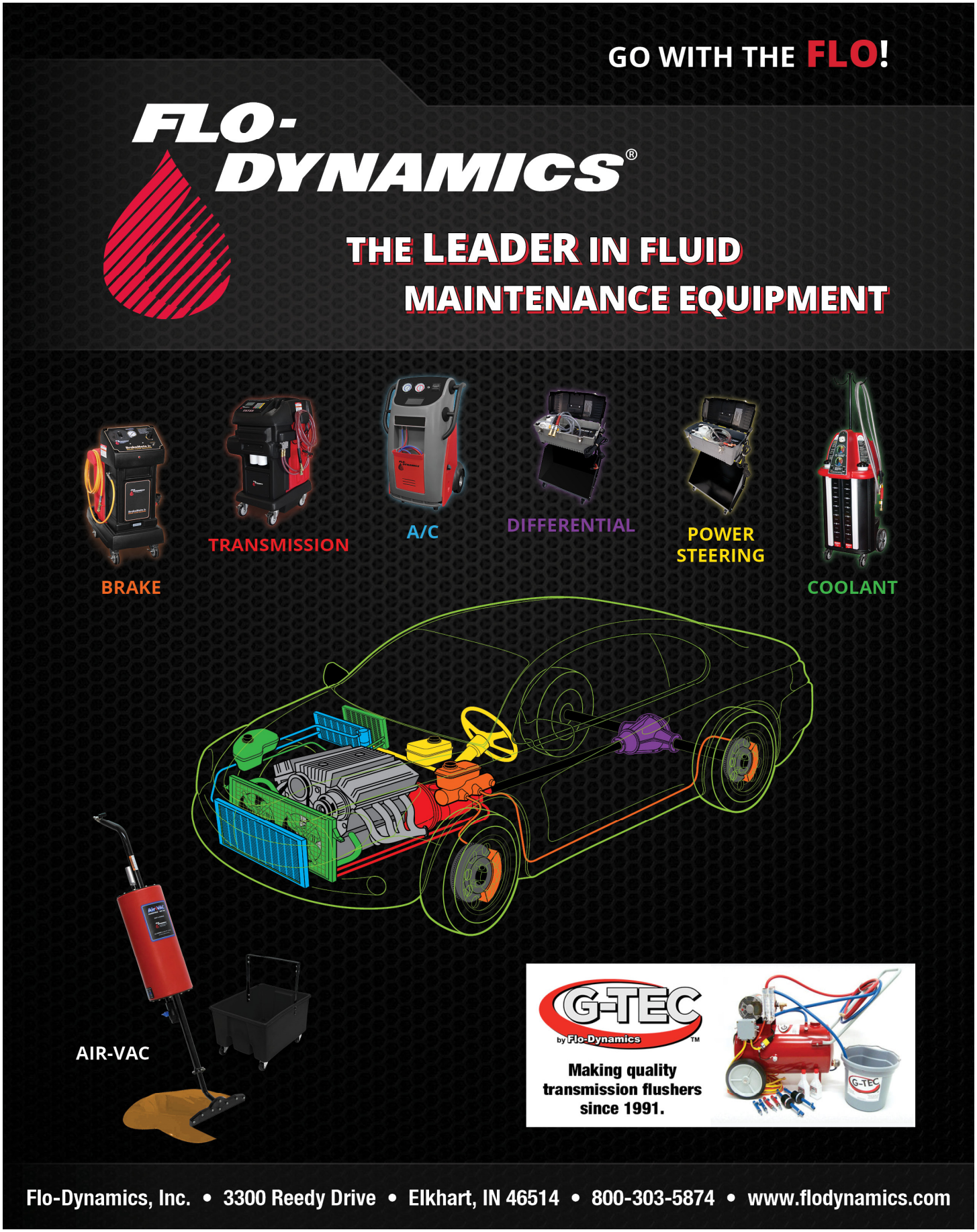
GO WITH THE FLO!
FLO-DYNAMICS®
THE LEADER IN FLUID MAINTENANCE EQUIPMENT
BRAKE
TRANSMISSION
A/C
DIFFERENTIAL
POWER STEERING
COOLANT
AIR-VAC
G-TEC
by Flo-Dynamics
Making quality transmission flushers since 1991.
Flo-Dynamics, Inc. • 3300 Reedy Drive • Elkhart, IN 46514 • 800-303-5874 • www.flodynamics.com

"Reading An Electrical Map Means Little If You Don't' Know How To Drive" (con't from p. 14)

all together.

If you are not as comfortable with tracing wiring diagrams as you'd like to be, I would recommend you Google "Wiring Diagram Color Coding by Jorge Menchu." Menchu has been teaching wiring diagram color-coding seminars for years and offers his resources at AESWave.com.

In his seminar, he covers the basics that many have missed in our industry. Menchu explains how to color code the wiring diagram in five basic parts using red to represent power all the time, green as grounds all the time, orange as power only when the circuit (control device) is closed, yellow as ground only when the circuit (control device) is closed and blue as a variable voltage. Most electrical faults can be found easily when you know what test results to expect, and Menchu's method of color-coding helps you do just that. I'd also recommend you visit the TST website and checkout Peter Orlando webinar he did for TST last month. The name is Effective Electrical Troubleshooting - Using Asian OE Schematics. This webinar is chucked full of important information on wiring diagrams and comes with a great book that was provide by CTI (Car Quest Training Institute).

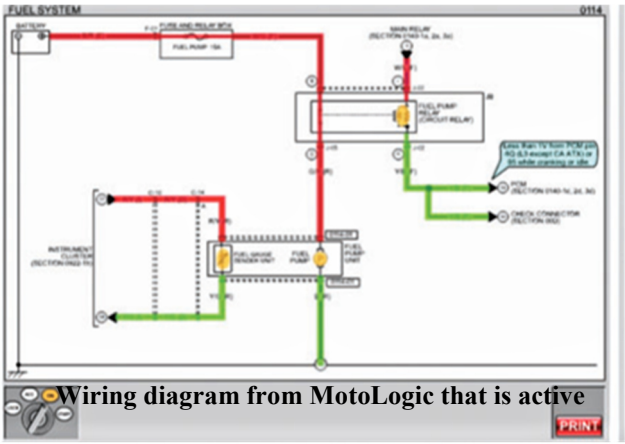

Wiring diagram from MotoLogic that is active

Something To Get You Going

For an example of how to get started improving your wiring diagram navigational skills, I'm going to use a typical block diagram schematic of a 2007 Toyota Corolla CE headlight circuit and show how to use it to troubleshoot a inoperative driver's side low beam.

(Con't on page 18)

"Reading An Electrical Map Means Little If You Don't' Know How To Drive"

(con't from p. 17)

If you're typical, the first thing you'd do is replace the bulb. Hey, I would have done the same thing. And most of the time we'd probably be right. But what would you do when the new bulb also fails to work?

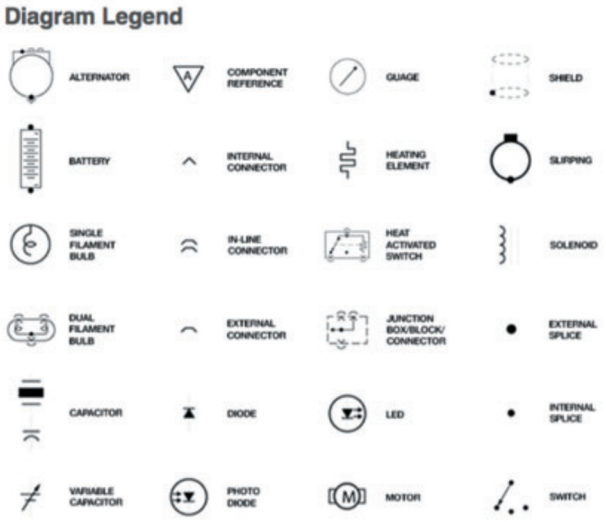

Go make a copy of the diagram and follow along.

Lots of stuff on this diagram on page 23, isn't there? Don't freak out quite yet. You already know that every electrical circuit has to have certain basic elements in order to work. The first thing we need is a load, or component that will do the job we want the circuit to perform. What other reason would we have for wiring stuff in? In this case, it's the headlights, so let's find them first and give them a little color so we can find them again easily.

With the load identified, it's time to move on to what that load needs to work: power and ground. The object of the next step is to locate and identify the wires at the load that supply both. In this case, there are only two wires to choose from, so we've got a 50/50 shot. Seriously, though, in those cases where the load has more than two wires, just pick one and start following it to see where it goes.

I'm going to start with the one on top. In block diagrams, power wires generally head up the page while ground wires generally head down. This might not always be the case, and it doesn't really matter. Like I said, I've got a 50/50 shot. This red wire with a white tracer (that is, a stripe that runs the length of the wire) first enters the fuse box where a 10-amp fuse provides the protection against shorts to ground for this circuit. A fuse will be located only on the power side of the load so I know what side I'm tracing now.

It's also easy to see that just past the fuse, the power feed to the other headlight is spliced in. The two bulbs might have

(Con't on page 23)


LAUNCH
TECH USA
CREATE • CHANGE
X- 431 Torque
X- 431 Torque
"EXPERIENCE THE EASE"
"FEEL THE POWER"
WWW.LAUNCHTECHUSA.COM
1820 S. MILLIKEN AVE • ONTARIO, CA 91761 • PH : 1-877-528-6249

AE TOOLS & COMPUTERS

At AE Tools & Computers we help the aftermarket repair facility do everything the OEM dealer can do with regards to diagnostics. We give them the ability to keep their customer's vehicles in their bays through completion of the repair. This generally starts with a phone consultation to determine the TRUE needs of the individual repair facility. We do not want to just sell another tool. We want to sell the tool that meets the needs of the repair shop that we are servicing. We are selling Solutions.

YOU'VE GOT TECH SUPPORT

Simply call us when you have questions or problems. We will log in remotely to help you through the issues you are having. This support is REAL. This is not cable replacement support. Anyone can do that. We are actually helping you with the things that get the lights to go out on the dash, so you can deliver the car to the customer, get paid and move on to the next job.

HAVE QUESTIONS? TALK TO A REAL PERSON!

913.856.6678

LIVE SUPPORT HOURS MONDAY - FRIDAY 8 AM - 6 PM CST

SUPPORT@AETOOLS.US

WWW.AETOOLS.US

WHAT MAKES OUR LAPTOPS SO SPECIAL?

"Reading An Electrical Map Means Little If You Don't' Know How To Drive"

(con't from p. 18)

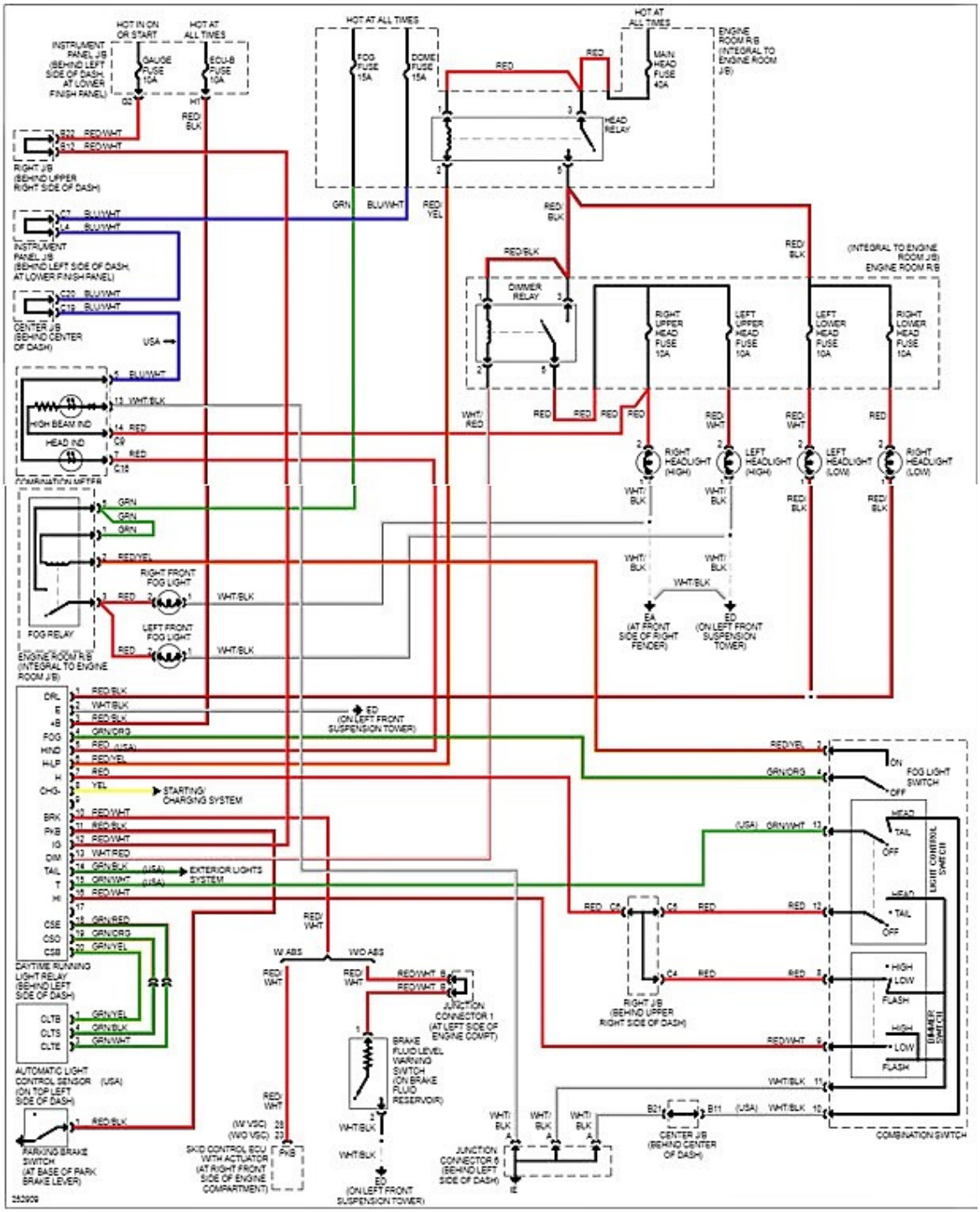

the red trail now changes from one with a white tracer to one with a black one. The path leads to the headlight relay, and by the look of the relay symbol, it's on the switch side of the relay. What does that make the relay?

With one half done, let's go back to the headlight and find out how current passing through it makes it's way to ground. The only wire left to trace is… what, another red wire with black tracer? But didn't we already trace that wire up at the relay? We can't have two power wires going to the headlight, can we?

(Con't on page 24)

"Reading An Electrical Map Means Little If You Don't' Know How To Drive" *(con't from p. 23)*

No, of course not. Just goes to show you that wire colors aren't necessarily unique to the one you have your hand on.

So let's continue. It doesn't take long to see that both low beams come together on this path. Joined, they both continue along to the Daytime Running Light Relay (DRL). Sure are a lot of wires coming off of this thing, aren't there?

I'm So Confused!

Here is where a lot of techs start to lose it. They find themselves tracing a diagram to a complex component on a wire they want to believe is one thing but the colors are telling them it's something else. Trust what you know. You'll find, as Menchu is fond of saying, that you know more than you give yourself credit for.

The red/black wire at the DRL has to be the ground path for the low beam headlights, doesn't it? With the complaint of only one low beam not working, do I care what the DRL does or how it does it? Think about that for a minute.

Both headlights share this part of the path, don't they? Anything that happens after the point where the two headlights meet would affect the operation of the both of them. And since we aren't having any problems with the right side, I'm going to focus only on that part of the schematic unique to the left one.

So which side has the problem? That's easy enough to find out. Turn the headlights on and measure for voltage with your multimeter at the red wire with white tracer. Take this measurement right at the headlight connector and ground your meter right at the battery. This makes sure you check the entire path you just traced on your diagram.

(Con't on page 25)

"Reading An Electrical Map Means Little If You Don't' Know How To Drive" *(con't from p. 24)*

Yes, I know I said I'm only concerned about that part of the wiring unique to the light, but testing the entire path is a best practice and a good habit to get into.

If there's no power, then there has to be a problem between the bulb connection and the point where the power feed splices together. The fuse would be the next easiest place to check. Just be sure to check it on both sides. I have seen fuses that looked fine on a visual check but were still open. No power there either? Only one stop left, and that's at the red/black wire that brings the power to the two low beam fuses.

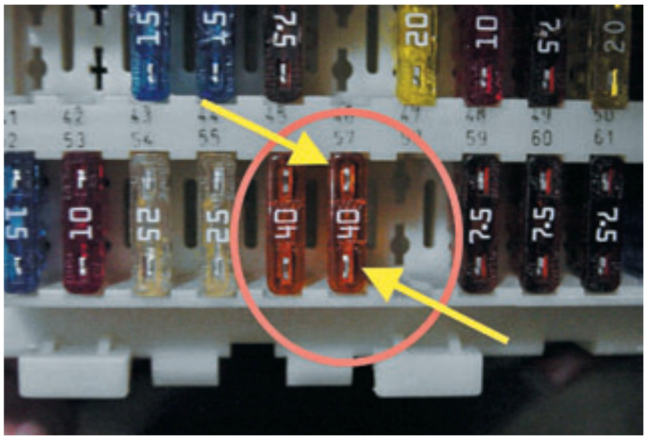

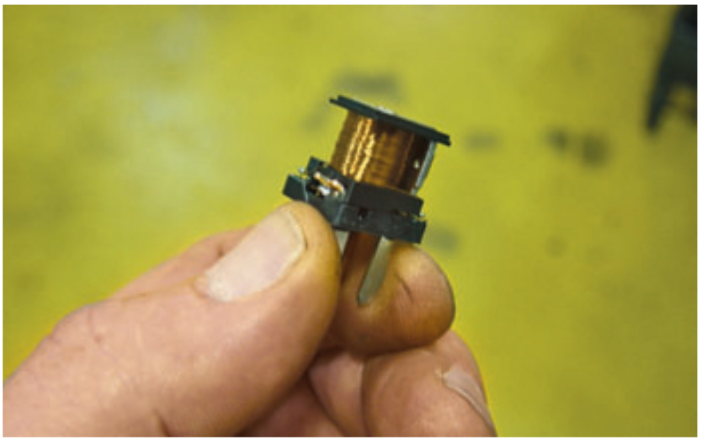

What if there is power? Then we move our multimeter lead to the ground side. If we read the same voltage here as we did on the power side with the lights turned on, there is an open circuit between the bulb and the ground splice point. If we read a perfect 0 on the meter, the bulb filament is blown or the bulb is not making good contact in the socket. No current is flowing. Any reading between the two over, say, 0.50 volt indicates excessive resistance in that short section of wiring, But if that were the case, the bulb would be lit, just dim.

And if Both Sides Worked?

You would still perform the same two tests, measuring the amount of voltage on both the power side and ground side of the bulbs as close to them as you can get. The only difference is where you would focus your efforts on

(Con't on page 26)

"Reading An Electrical Map Means Little If You Don't' Know How To Drive" *(con't from p. 25)*

the side with the problem. Because both bulbs are not working, you'd look only at those parts of the circuit the two have in common. You might even have to do some reading on how that DRL works, but it's a sure bet it completes ground somehow.

That's where your skill, training and experience come into play. Just like a good driver, you are comfortable with the idea of the basic operation of the system you're taking on. If not, you'll learn about that system first, won't you?

And that's what separates you from the amateur.

Article 's By
" G " Jerry Truglia
TST Founder and President
ASE World Class Triple Master
Auto, Truck, School Bus L1, L2, F1, X1, C1,Technician

Presents

"The Virtual 17th Annual TST Tech Training Big Event"

Featuring:

1. *Scot Manna – MB Auto " 2021 Diagnostics & Programming"*
2. *Bobby "G" Gruszczynski Keynote Speaker "5 Digit DTCs"*
3. *John Anello – ATOW "Getting to Know ADAS"*
4. *Vin Waterhouse "The Labor Factory"*
5. *"G" Jerry Truglia "Special LIVE TECHNICAL SEMINAR"*

Be a part of the LARGEST Electronic Handout Automotive Seminar in the Country!

Includes: a FREE ANDROID TABLET loaded with 5 full color Manuals and Newsletter.

Saturday March 27th and Sunday March 28th 2021

Training starts at 8:00 am ET both days….

All Training Available for 3 months